coax® data sheet - coaxial valve

type MCF 08

09/2022

⚠ Above stated body materials refer to the valve port connections that get in contact with the media only!

2/2-way valve	**externally controlled**	
pressure range	PN 0-100 bar	
orifice	DN 8 mm	
connection	thread	
function	valve normally closed symbol **NC**	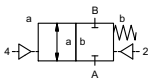
	valve normally open symbol **NO**	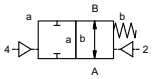
operating principle	pressure balanced, with spring return	
body material	① brass	②
	③	⑤
	④	⑥
valve seat	synthetic materials on metal	
seal materials	NBR, FPM, PTFE	

details needed for main valve

- orifice
- port
- function NC/NO
- operating pressure
- flow rate
- media
- media temperature
- ambient temperature
- type of actuation

details needed for pneumatic actuation

- nominal voltage
- type of protection
- actuation pressure range min/max
- pilot valve type

⚠ The valves' technical design is based on media and application requirements. This can lead to deviations from the general specifications shown on the data sheet with regards to the design, sealing materials and characteristics.

⚠ If order or application specifications are incomplete or imprecise there exists a risk of an incorrect technical design of the valve for the required application. As a consequence, the physical and / or chemical properties of the materials or seals used, may not be suitable for the intended application. To avoid hydraulic shocks in pipelines, the flow velocities must be taken into account when designing valves for liquids.

general specifications			**options**
ports	MCF	threads G 3/8	
function		NC	NO
pressure range	bar	0-100	
Kv value	m³/h	1.6	
vacuum	leak rate		< 10^{-6} mbar•l•s^{-1}
pressure-vacuum	$P_1 \Leftrightarrow P_2$		pressure side max. 100 bar vacuum side leak rate upon request
back pressure	$P_2 > P_1$		available (max. 16 bar)
media		emulsion - oil - neutral gases	other medias upon request
abrasive media			
damping	opening		
	closing	by throttles on pilot valve	
flow direction	A ⇨ B	as marked	
switching cycles	1/min	600	
switching time	ms	opening 30-3000	
		closing 30-3000	
media temperature	°C	direct mounted pilot valve 60	> 60 °C upon request
ambient temperature	°C	direct mounted pilot valve 50	> 50 °C upon request
flush ports			
leak ports			
limit switches			temperature range max 70°C
manual override		via pilot valve	
approvals			
mounting			mounting brackets
weight	kg	1.3	
additional equipment			

electrical specifications			**options**
nominal voltage	U_n	DC 24 V	special voltage upon request
	U_n	AC 230 V 50 Hz	special voltage upon request
power consumption	DC	4.8 W	2.5 W (actuation pressure range 4-7 bar)
	AC	pick up 11.0 VA holding 8.5 VA	
protection	IP65 (P54)	acc. DIN 40050	
energized duty rating	ED	100%	
connection		plug acc. DIN EN 175301-803 form B, 2 positions x180° / wire diameter 6-8 mm	
optional	M12x1	connector acc. DESINA	connector acc. VDMA
additional equipment		illuminated plug with varistor	
max. temperature	media	60°C	
	ambient	50°C	
explosion proof	E Ex e II T5	nominal voltage U_n	DC 24 V 3.25 W
		power consumption	AC 230 V 50 Hz 2.90 W

pneumatic specifications			**options**
actuation pressure range	bar	4-8	3-10 upon request
air consumption	cm³/stroke	4,5	
cycle speed		main valve speed variable by throttleson pilot valve	
control		preferably 5/2 way pilot valve	
pilot valve interface		co-ax	NAMUR acc. VDI / VDE 3845
actuator ports	2/4	G 1/8	

hydraulic specifications	**options**
actuation pressure range	
control	
actuator ports	
by media	

- specifications not highlighted are standard
- specifications highlighted in grey are optional

müller co-ax gmbh • Friedrich-Müller-Str. 1 • 74670 Forchtenberg • Germany • fon +49(0)7947/828-0 • fax +49(0)7947/828-11 • Email info@co-ax.com

coax® data sheet - coaxial valve

type MCF 08

function: **NC**
closed when not energized

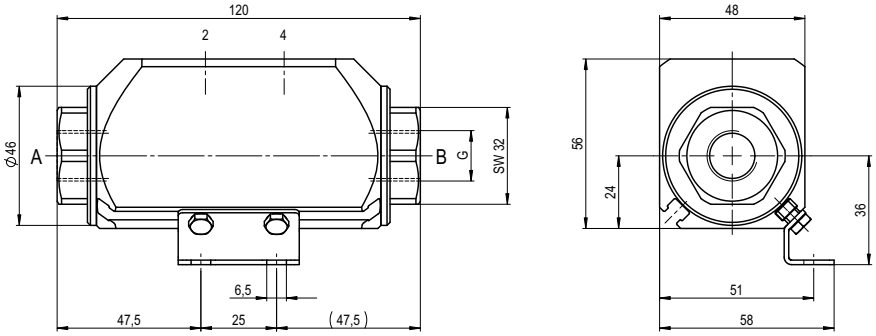

function: **NO**
open when not energized

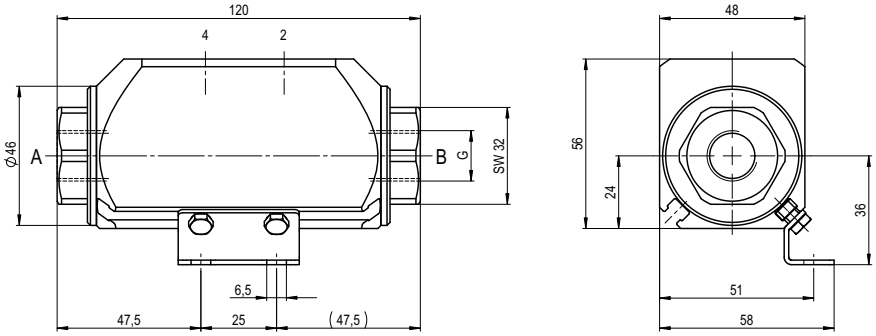

pneumatic specifications

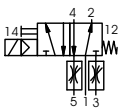

5/2 way pilot valve
flow rate 280 l/min
pressure range 3-10 bar G 1/8